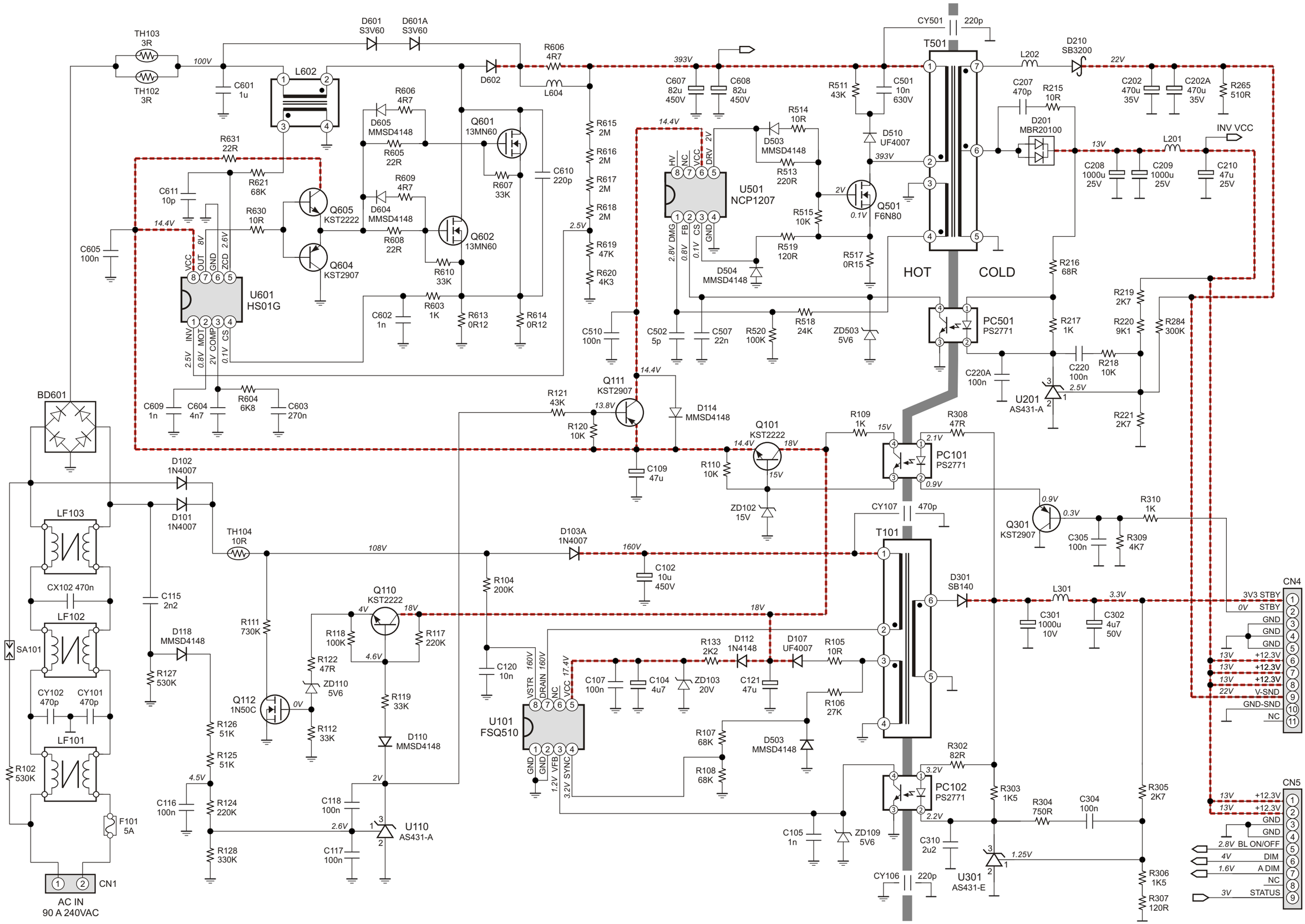
TH103 3R
TH102 3R
100V
C601 1u
L602
D601 S3V60
D601A S3V60
D602
R606 4R7
L604
393V
C607 82u 450V
C608 82u 450V
CY501 220p
T501
R511 43K
C501 10n 630V
L202
D210 SB3200
22V
C202 470u 35V
C202A 470u 35V
R265 510R
C207 470p
R215 10R
D201 MBR20100
13V
L201
INV VCC
C208 1000u 25V
C209 1000u 25V
C210 47u 25V
R606 4R7
D605 MMSD4148
R605 22R
Q601 13MN60
R607 33K
C610 220p
R615 2M
R616 2M
R617 2M
R618 2M
R619 47K
R620 4K3
2.5V
R631 22R
R621 68K
C611 10p
R630 10R
Q605 KST2222
Q604 KST2907
D604 MMSD4148
R609 4R7
R608 22R
Q602 13MN60
R610 33K
C605 100n
14.4V
VCC OUT GND ZCD
8V 2.6V
U601 HS01G
INV MOT COMP CS
2.5V 0.8V 2V 0.1V
C602 1n
R603 1K
R613 0R12
R614 0R12
C510 100n
14.4V
2V
HV NC VCC DRV
U501 NCP1207
DMG FB CS GND
2.8V 0.8V 0.1V
R514 10R
D503 MMSD4148
R513 220R
R515 10K
R519 120R
D504 MMSD4148
D510 UF4007
393V
2V
Q501 F6N80
0.1V
R517 0R15
HOT
COLD
R216 68R
R219 2K7
R220 9K1
R284 300K
PC501 PS2771
R217 1K
C220 100n
R218 10K
C220A 100n
U201 AS431-A
2.5V
R221 2K7
C502 5p
C507 22n
R520 100K
R518 24K
ZD503 5V6
BD601
C609 1n
C604 4n7
R604 6K8
C603 270n
R121 43K
R120 10K
13.8V
Q111 KST2907
14.4V
D114 MMSD4148
C109 47u
Q101 KST2222
14.4V
18V
15V
R110 10K
ZD102 15V
R109 1K
15V
R308 47R
2.1V
PC101 PS2771
0.9V
D102 1N4007
D101 1N4007
LF103
LF102
LF101
SA101
CX102 470n
CY102 470p
CY101 470p
R102 530K
F101 5A
CN1
AC IN
90 A 240VAC
TH104 10R
108V
D103A 1N4007
160V
C102 10u 450V
CY107 470p
T101
Q301 KST2907
0.9V
0.3V
C305 100n
R309 4K7
R310 1K
C115 2n2
D118 MMSD4148
R127 530K
R111 730K
Q110 KST2222
4V
18V
R118 100K
R117 220K
R122 47R
ZD110 5V6
4.6V
R119 33K
Q112 1N50C
0V
R112 33K
R104 200K
18V
C120 10n
D301 SB140
L301
3.3V
C301 1000u 10V
C302 4u7 50V
CN4
3V3 STBY
STBY
GND
+12.3V
V-SND
GND-SND
NC
R126 51K
R125 51K
4.5V
R124 220K
R128 330K
C116 100n
C118 100n
2.6V
C117 100n
2V
D110 MMSD4148
U110 AS431-A
U101 FSQ510
VSTR DRAIN NC VCC
160V 160V 17.4V
GND GND VFB SYNC
1.2V 3.2V
C107 100n
C104 4u7
ZD103 20V
R133 2K2
D112 1N4148
C121 47u
D107 UF4007
R105 10R
R106 27K
R107 68K
R108 68K
D503 MMSD4148
R302 82R
3.2V
PC102 PS2771
2.2V
R303 1K5
R304 750R
C304 100n
R305 2K7
C105 1n
ZD109 5V6
C310 2u2
1.25V
U301 AS431-E
CY106 220p
R306 1K5
R307 120R
CN5
BL ON/OFF
DIM
A DIM
STATUS

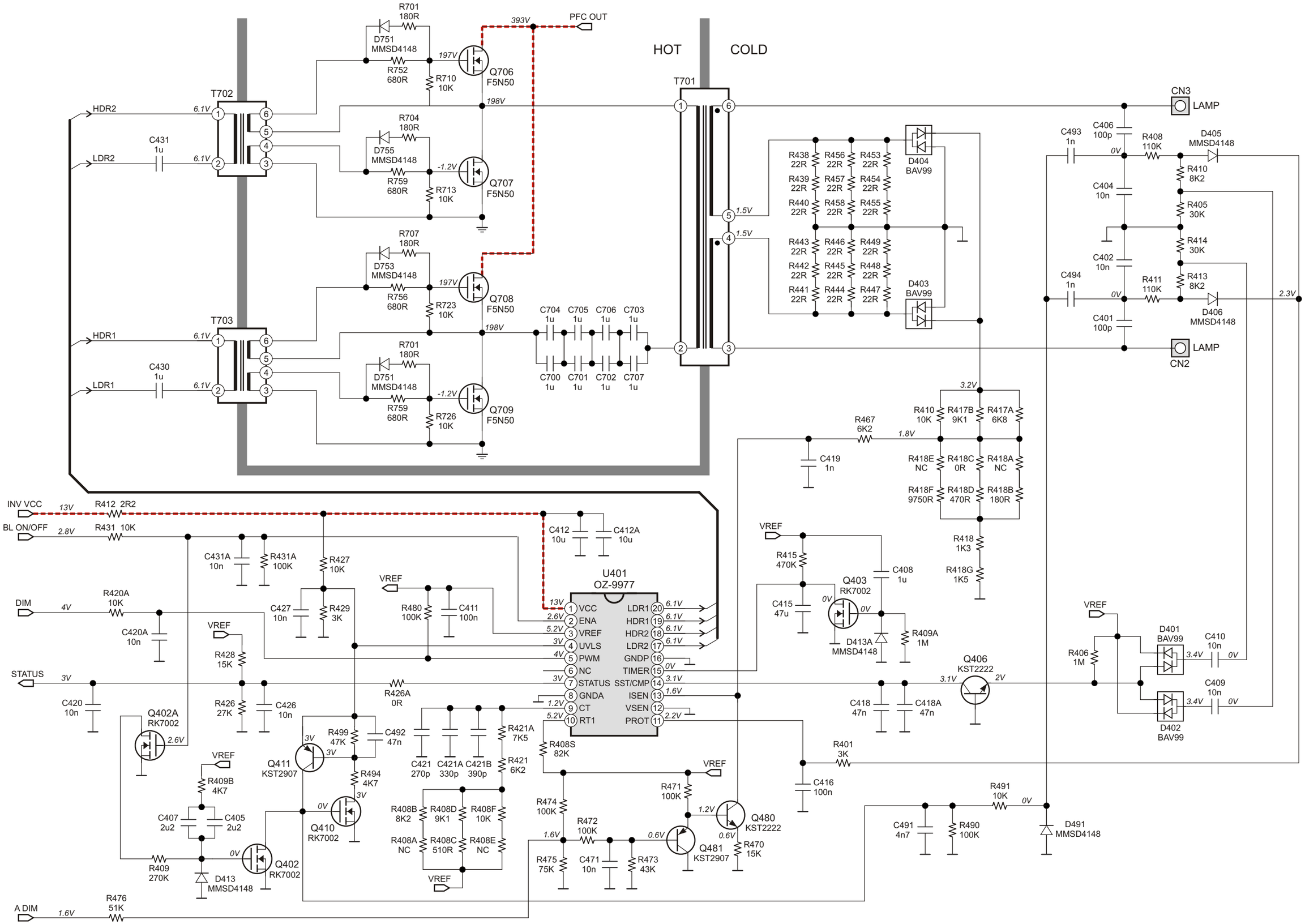
HOT
COLD
PFC OUT
393V
T702
T703
T701
HDR2
LDR2
HDR1
LDR1
C431 1u
C430 1u
R701 180R
D751 MMSD4148
R752 680R
R710 10K
Q706 F5N50
R704 180R
D755 MMSD4148
R759 680R
R713 10K
Q707 F5N50
R707 180R
D753 MMSD4148
R756 680R
R723 10K
Q708 F5N50
R701 180R
D751 MMSD4148
R759 680R
R726 10K
Q709 F5N50
C704 1u
C705 1u
C706 1u
C703 1u
C700 1u
C701 1u
C702 1u
C707 1u
CN3
LAMP
CN2
LAMP
C406 100p
C404 10n
C402 10n
C401 100p
C493 1n
C494 1n
R408 110K
R411 110K
D405 MMSD4148
D406 MMSD4148
R410 8K2
R405 30K
R414 30K
R413 8K2
2.3V
D404 BAV99
D403 BAV99
R438 22R
R439 22R
R440 22R
R456 22R
R457 22R
R458 22R
R453 22R
R454 22R
R455 22R
R443 22R
R442 22R
R441 22R
R446 22R
R445 22R
R444 22R
R449 22R
R448 22R
R447 22R
1.5V
1.5V
3.2V
R410 10K
R417B 9K1
R417A 6K8
R418E NC
R418C 0R
R418A NC
R418F 9750R
R418D 470R
R418B 180R
R418 1K3
R418G 1K5
R467 6K2
1.8V
C419 1n
INV VCC
13V
R412 2R2
BL ON/OFF
2.8V
R431 10K
C431A 10n
R431A 100K
R427 10K
C412 10u
C412A 10u
U401
OZ-9977
VCC
ENA
VREF
UVLS
PWM
NC
STATUS
GNDA
CT
RT1
LDR1
HDR1
HDR2
LDR2
GNDP
TIMER
SST/CMP
ISEN
VSEN
PROT
DIM
4V
R420A 10K
C420A 10n
C427 10n
R429 3K
R480 100K
C411 100n
VREF
R428 15K
STATUS
3V
C420 10n
R426 27K
C426 10n
R426A 0R
Q402A RK7002
2.6V
R499 47K
C492 47n
Q411 KST2907
R494 4K7
Q410 RK7002
R409B 4K7
C407 2u2
C405 2u2
R409 270K
D413 MMSD4148
Q402 RK7002
C421 270p
C421A 330p
C421B 390p
R421A 7K5
R421 6K2
R408S 82K
R408B 8K2
R408D 9K1
R408F 10K
R408A NC
R408C 510R
R408E NC
R474 100K
R472 100K
R475 75K
C471 10n
R473 43K
R471 100K
Q480 KST2222
Q481 KST2907
R470 15K
A DIM
1.6V
R476 51K
VREF
R415 470K
C415 47u
Q403 RK7002
C408 1u
D413A MMSD4148
R409A 1M
C418 47n
C418A 47n
Q406 KST2222
3.1V
2V
R401 3K
C416 100n
R406 1M
D401 BAV99
D402 BAV99
C410 10n
C409 10n
3.4V
R491 10K
C491 4n7
R490 100K
D491 MMSD4148