Lenoxx® sound
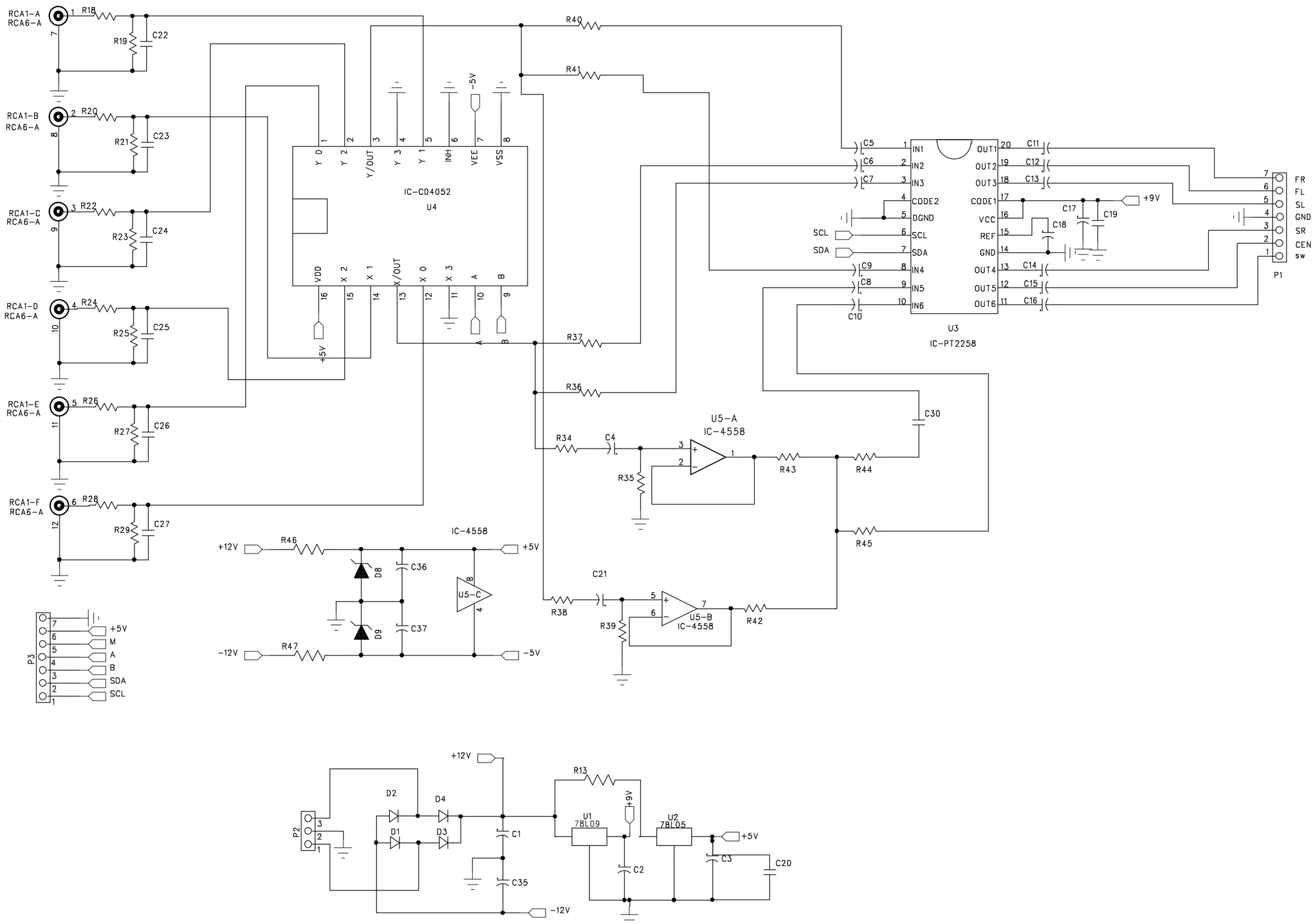
HT-310
HOME THEATHER
PCI INTERFACE